AVCOM System
Installation Instructions

Index

1) **AVCOM EN-1 System Drawings**
- AVCOM EN1 System …….. Page 1
- AVCOM EN1 with 2COP…….. Page 2
- AVCOM EN1 FF System…….. Page 3
-AVCOM EN1 Evacuation System…… Page 4
2) 20mm Car Speaker Wiring…….. Page 5
3)Stripped Down Car Speaker Wiring……. Page 6
4) 20mm 2COP Speaker Wiring…….. Page 8
5) 2COP Stripped Down Speaker Wiring…….. Page 9
6) RJ45 Plug & RJ45 to Terminal Arrangement…….. Page 11
7) AVCOM EN1/EN3/EN4 Functions…….. Page 12
8) AVCOM FF Functions……... Page 13
9) AVCOM Evacuation System Functions……. Page 14
10) Lift Controller Contacts for Evacuation & Fire Fighting……. Page 15
11) AVCOM System Troubleshooting……. Page 16
12) AVCOM Programming……. Page 17
13) AVCOM Remote Programming…….. Page 19
14) Dip Switch arrangements……. Page 20
15) Part Numbers……. Page 21

Windcrest **LiftBits Ltd** **Tel: 0208 795 0333**
Fax: 0208 795 0444

Cable description	Multi core wire	CAT5	or Cable used in special cases only

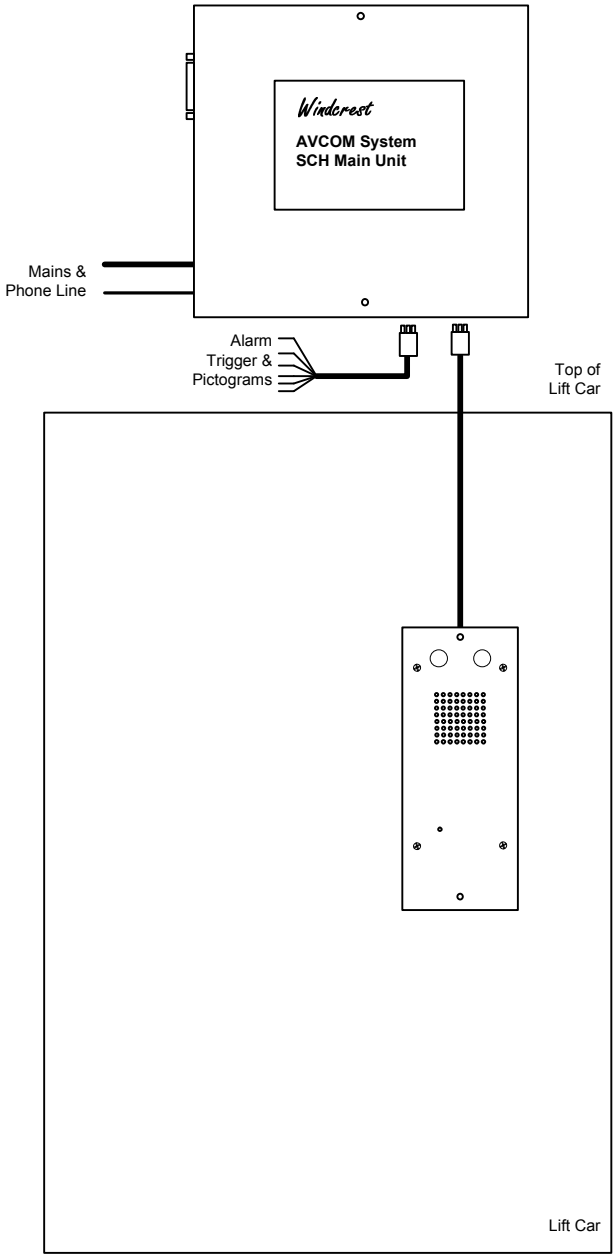

NOTE:

1) All cables used for the system must be Min CAT5

AVCOM EN-1	Drawing : EN-1 System	Page: 1
	01/08/2007	Version: 2

Cable description	Multi core wire	CAT5	or Cable used in special cases only

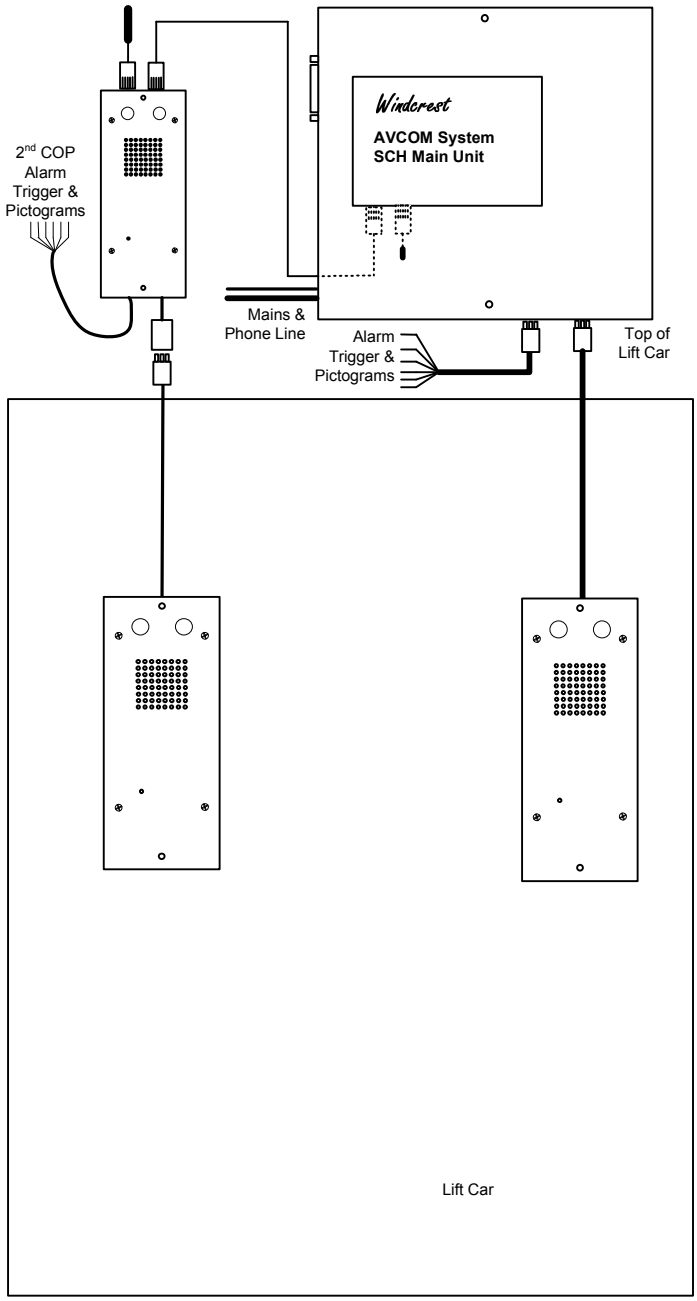

NOTE:

1) All cables used for the system must be Min CAT5

AVCOM EN-1 with 2COP	Drawing : EN1 2COP	Page: 2
	01/08/2011	Version: 2

Cable description	Multi core wire	CAT5	or Cable used in special cases only

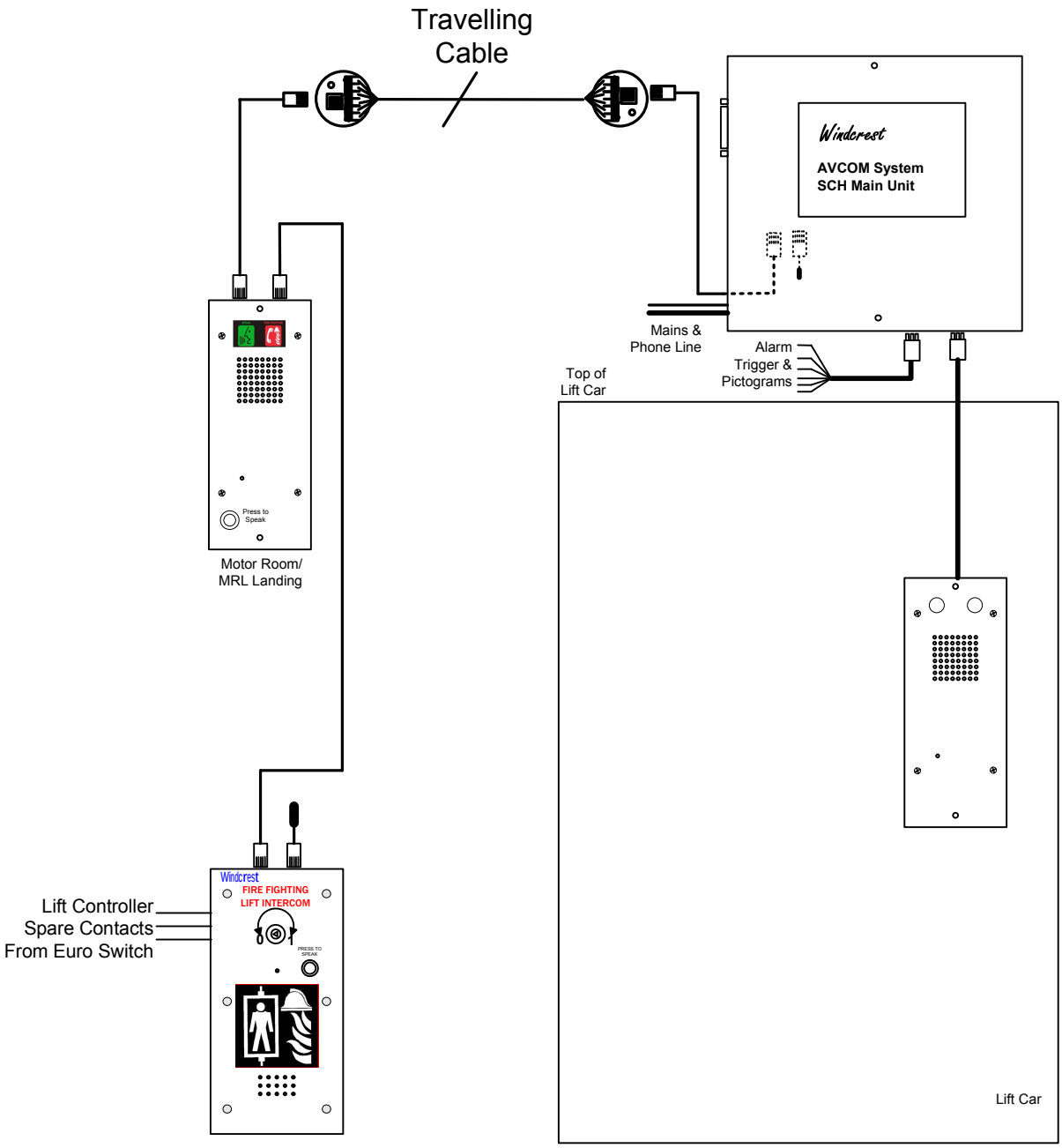

NOTE:

1) All cables used for the system must be Min CAT5

AVCOM EN-1 with Fire Fighting	Drawing : EN1-FF	Page : 3
	01/08/2011	Version: 2

Cable description	Multi core wire	CAT5	or Cable used in special cases only

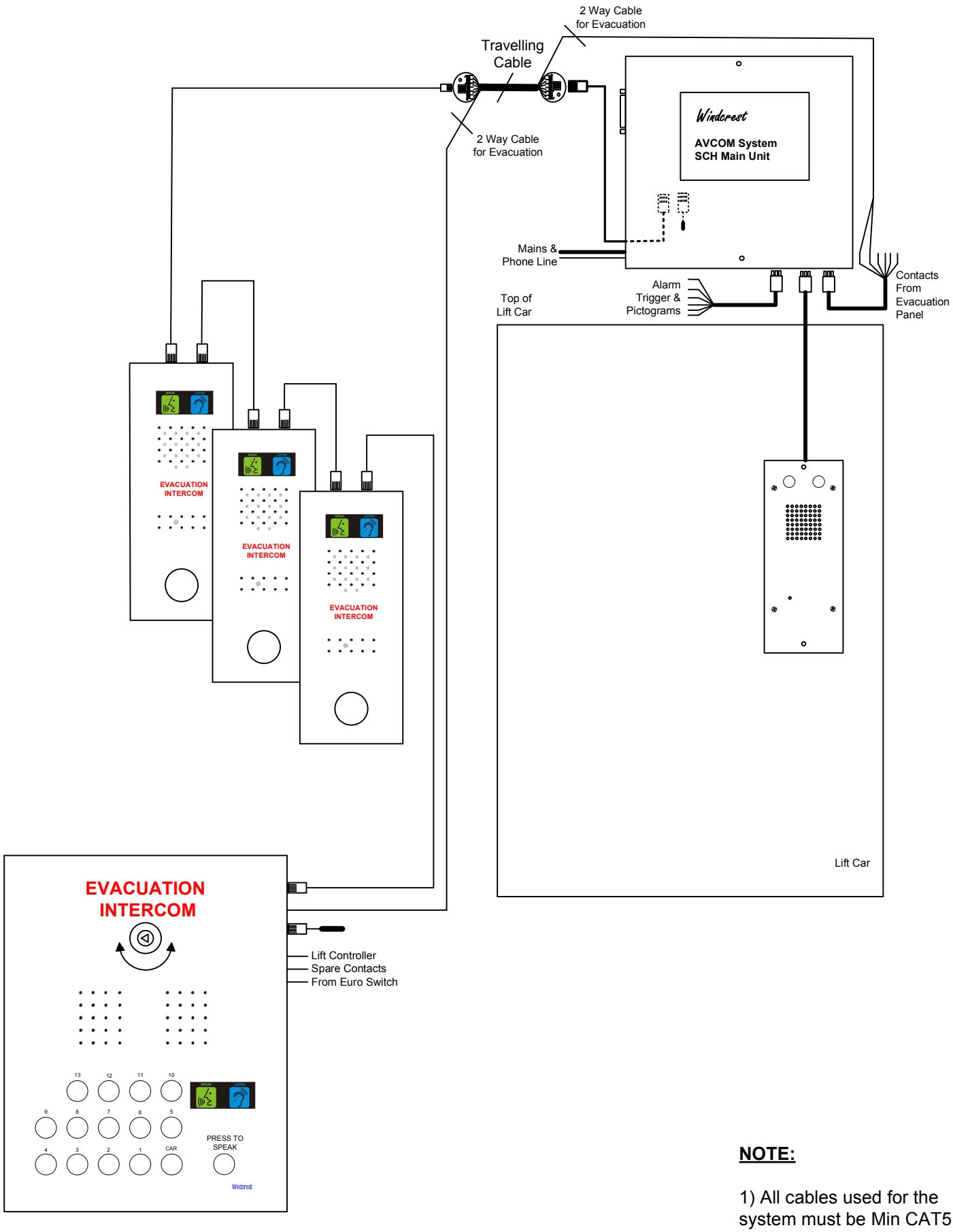

NOTE:

1) All cables used for the system must be Min CAT5

AVCOM EN-1 with Evacuation System	Drawing : EN1-EVAC	Page : 4
	01/08/2011	Version: 2

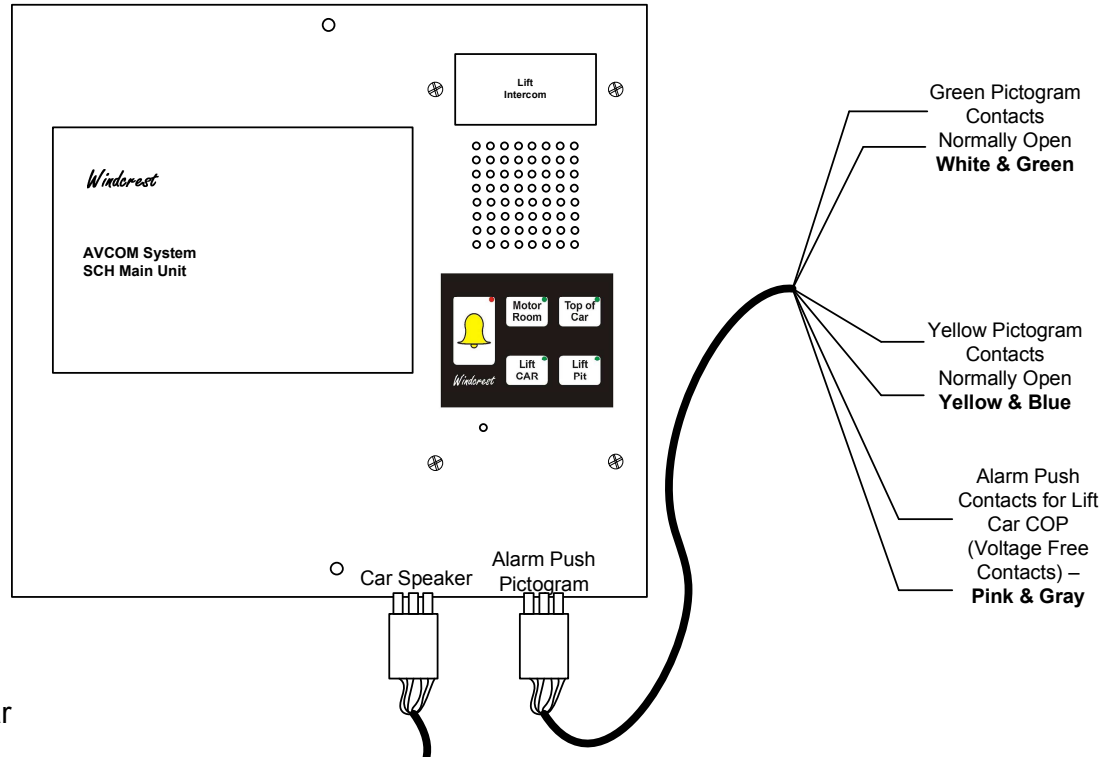

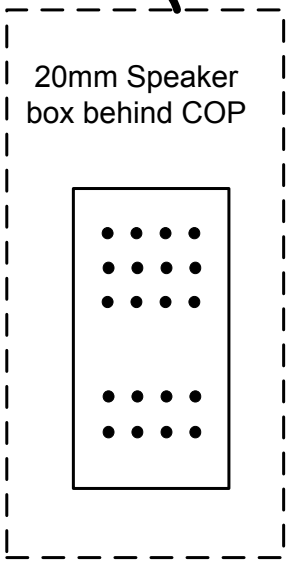

Note: Please refer to the next page for stripped down Speaker/Mic version of Car Speaker

Lift Car

20mm Car Speaker Wiring

Drawing : Car Speaker Wiring **Page : 5**

01/08/2011 **Version: 2**

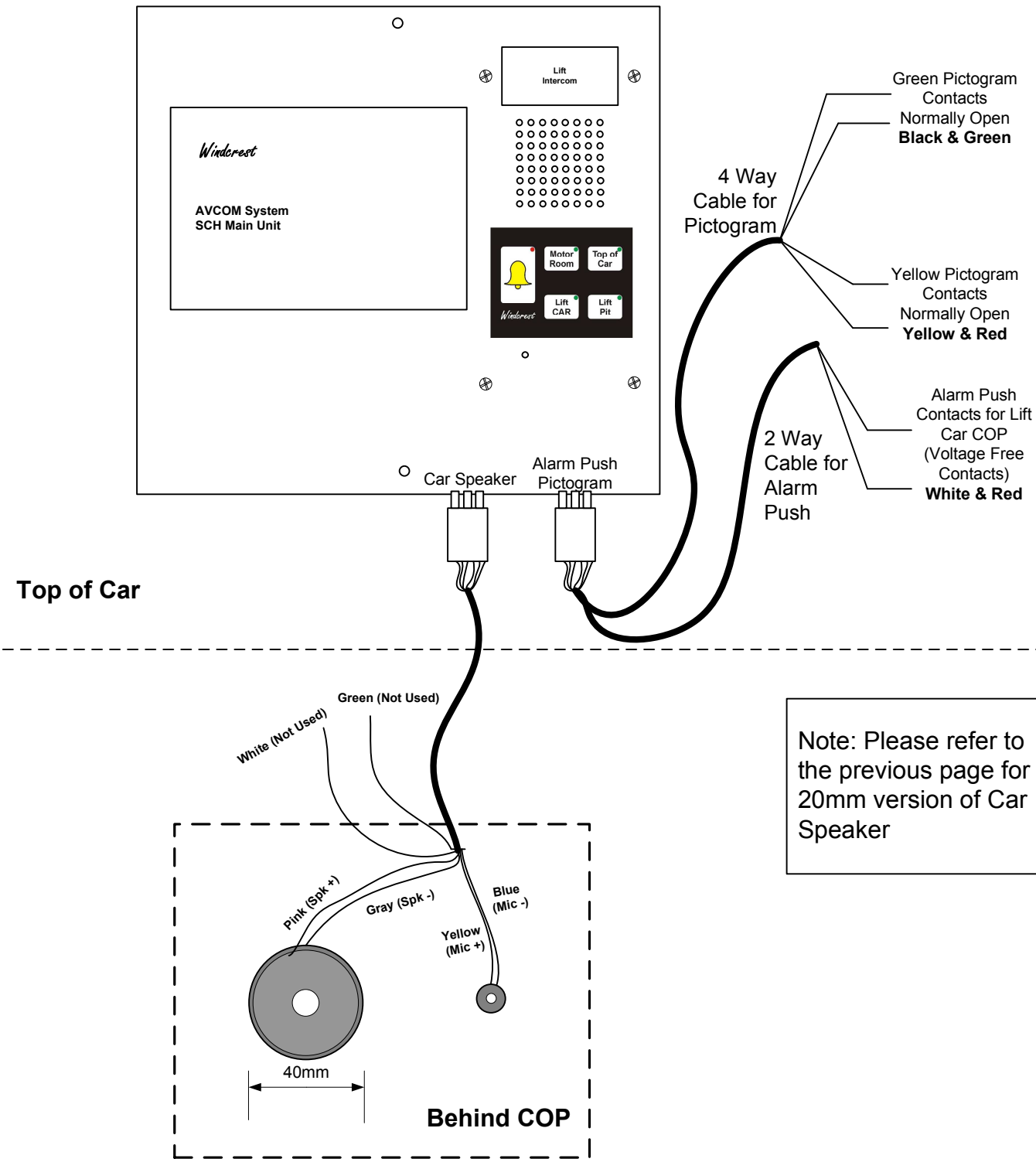

Note: Please refer to the previous page for 20mm version of Car Speaker

Car Speaker /Mic & Pictogram Wiring	**Drawing : Car Speaker Wiring**	**Page : 6**
	01/08/2011	**Version: 2**

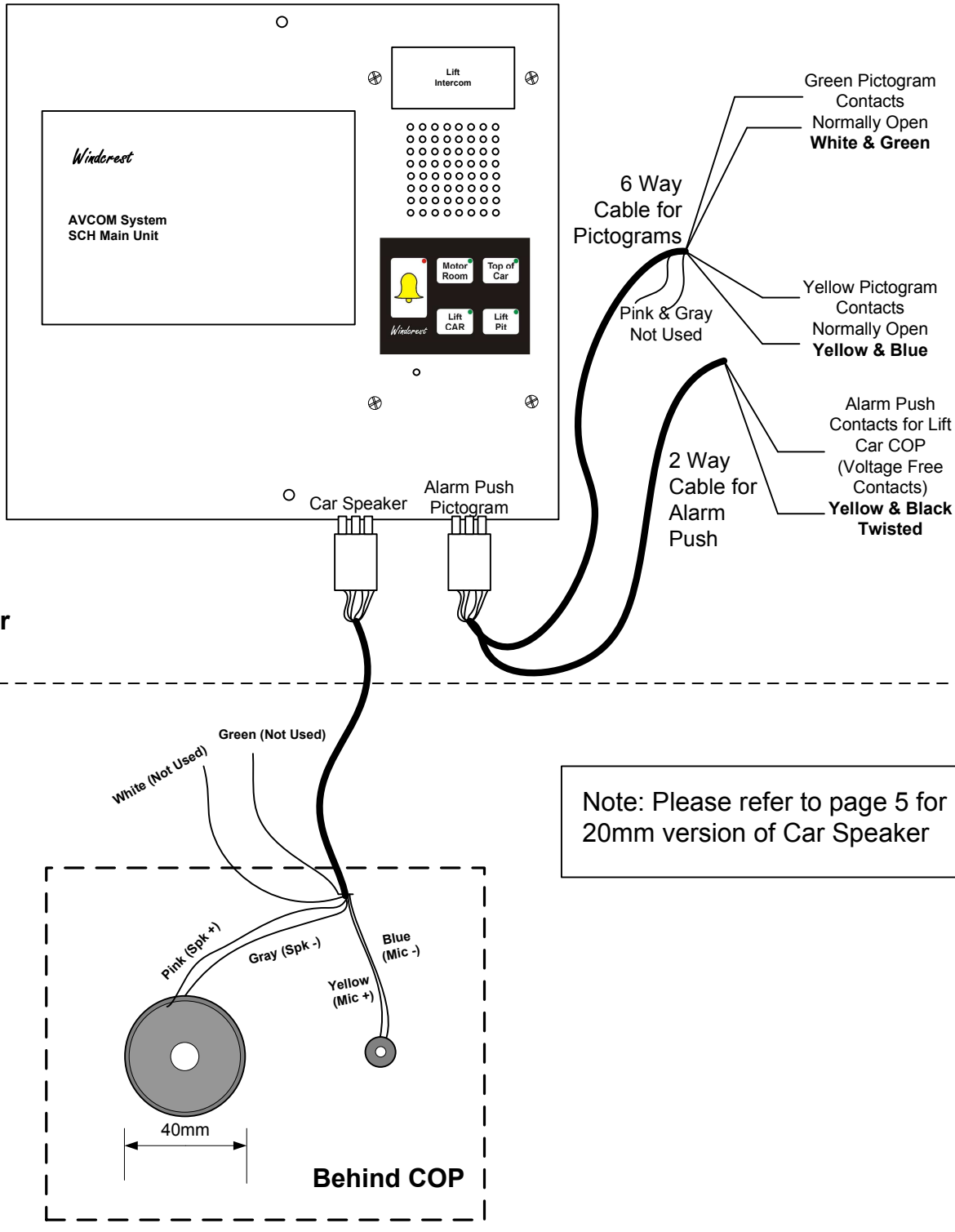

Note: Please refer to page 5 for 20mm version of Car Speaker

Car Speaker /Mic & Pictogram Wiring

Drawing : Car Speaker Wiring **Page : 7**

01/08/2011 **Version: 2**

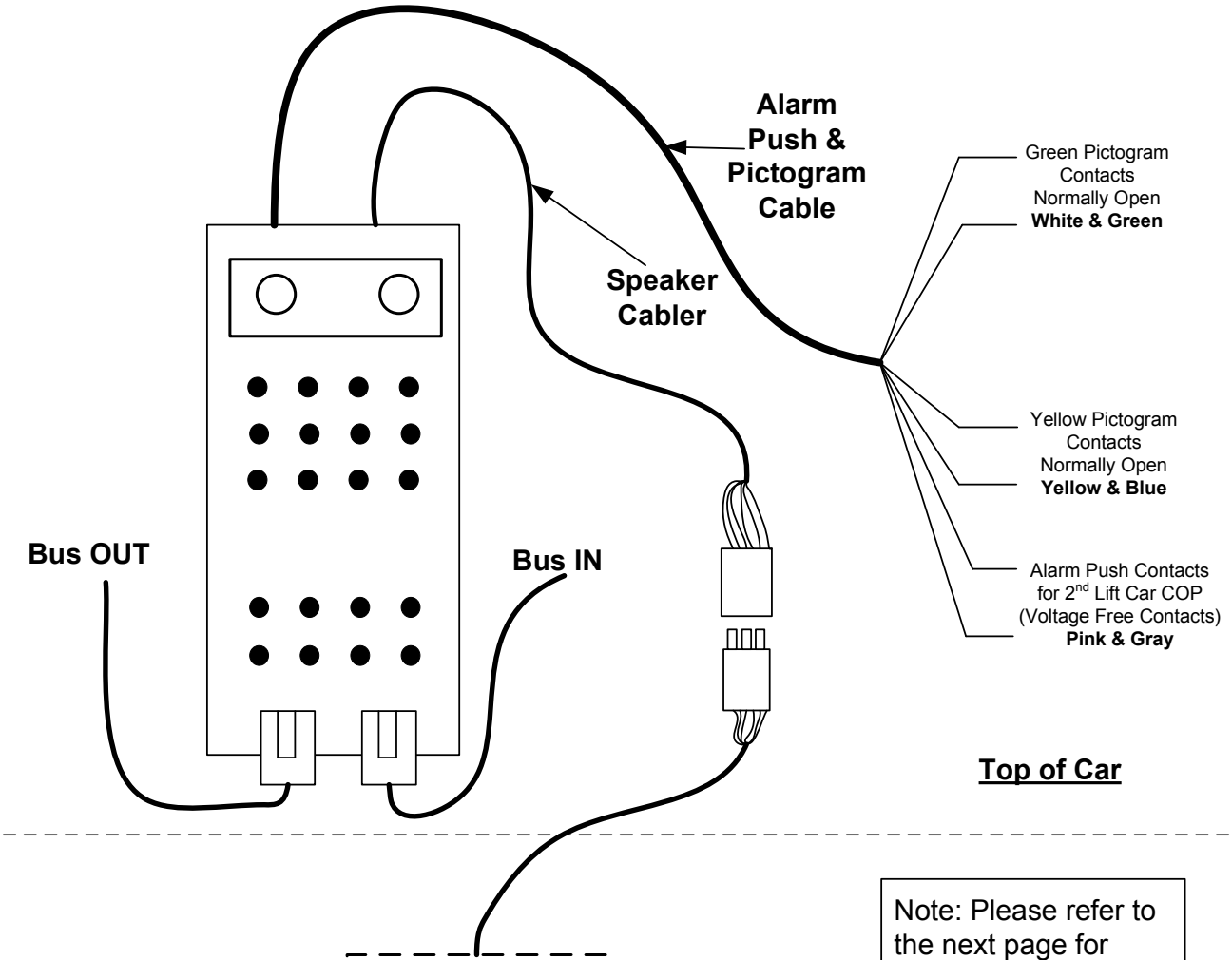

Note: Please refer to the next page for stripped down Speaker/Mic version of Car Speaker

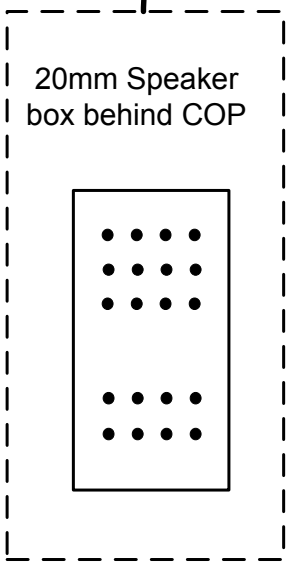

Lift Car

2COP Speaker Wiring	**Drawing : 2COP** **Page : 8**
	01/08/2011 **Version: 2**

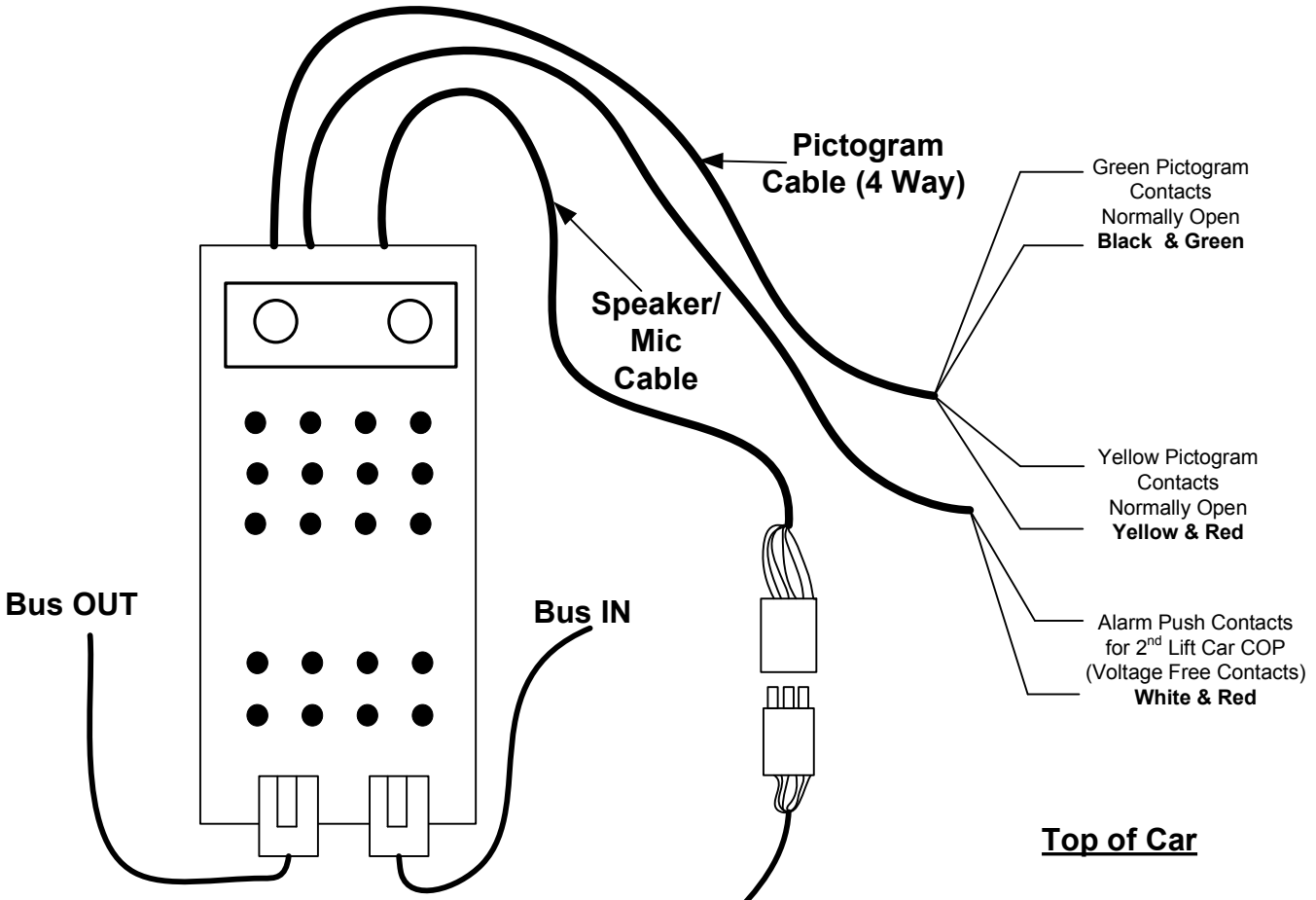

Top of Car

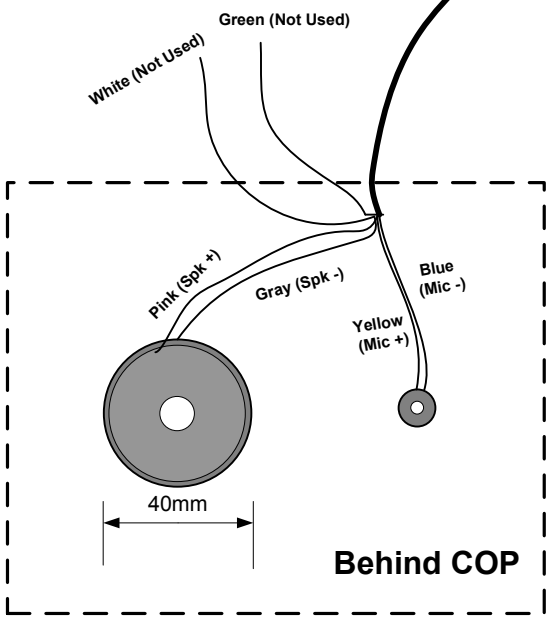

Note: Please refer to the previous page for 20mm version of Car Speaker

Lift Car

2COP Speaker/Mic & Pictogram Wiring	**Drawing : 2COP**	**Page : 9**
	01/08/2011	**Version: 2**

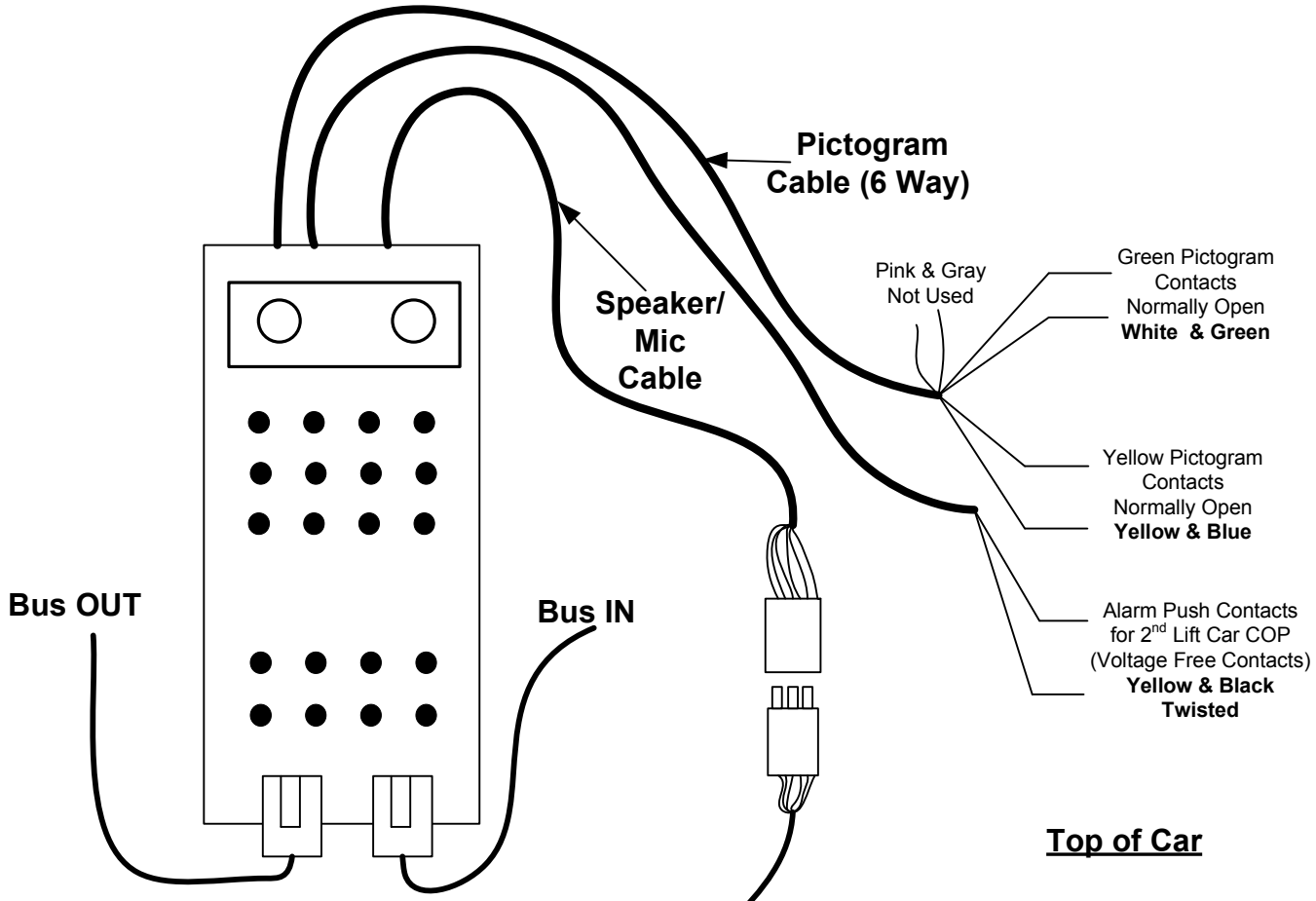

Top of Car

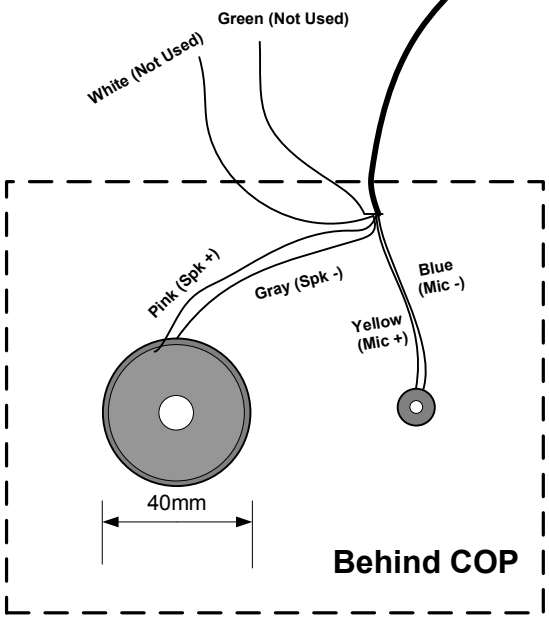

Note: Please refer to the page 8 for 20mm version of Car Speaker

Lift Car

2COP Speaker/Mic & Pictogram Wiring	**Drawing : 2COP**	**Page : 10**
	01/08/2011	**Version: 2**

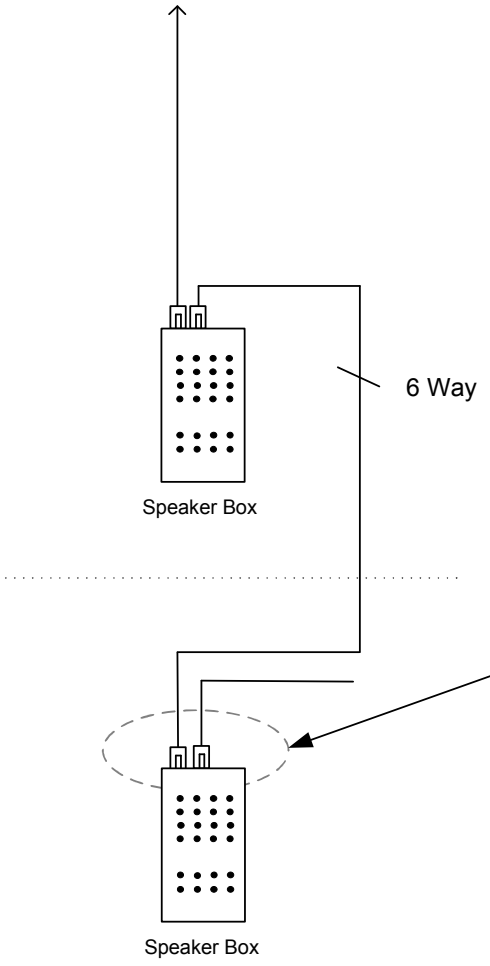

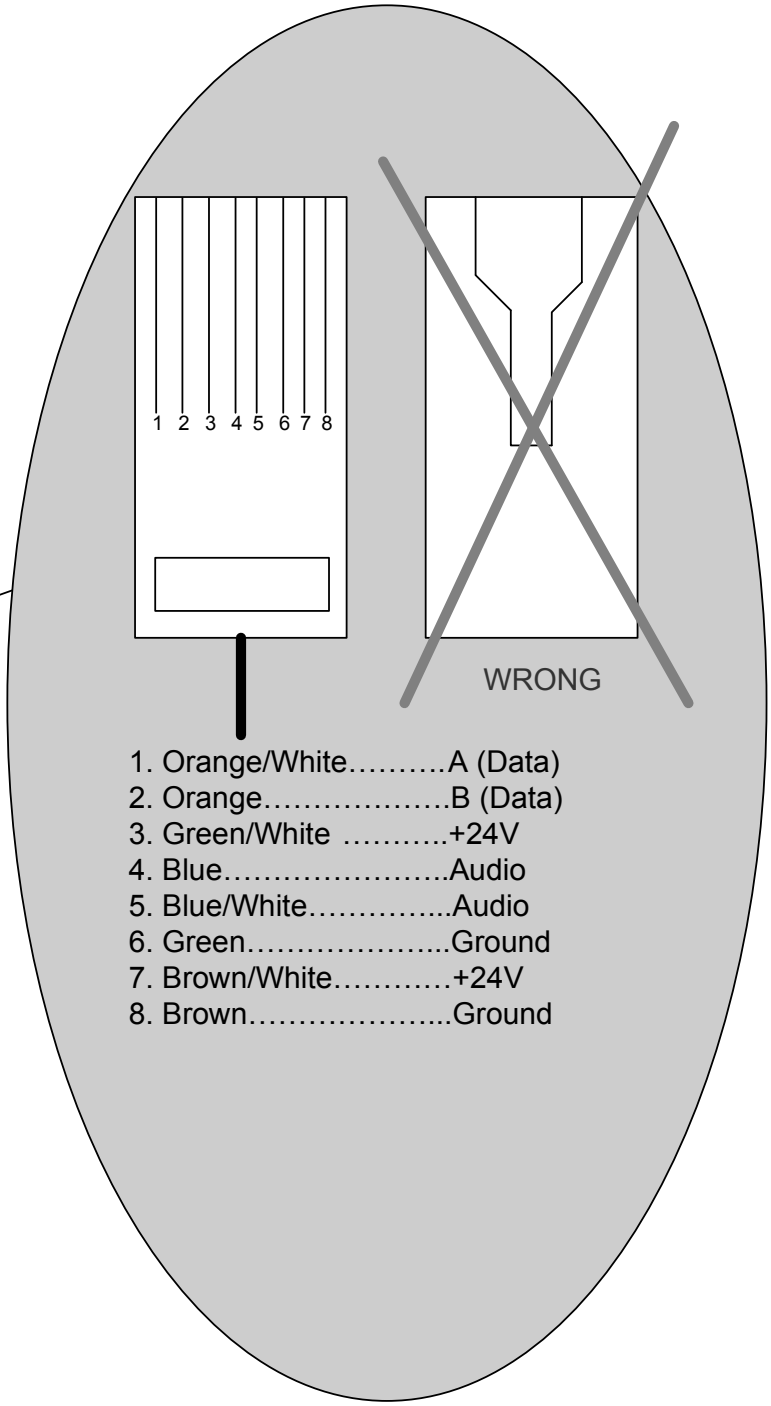

1. Orange/White…….A (Data)
2. Orange……B (Data)
3. Green/White ……..+24V
4. Blue……..Audio
5. Blue/White……...Audio
6. Green……...Ground
7. Brown/White……+24V
8. Brown……...Ground

A = White
B = Green
+ = Pink
GND = Gray

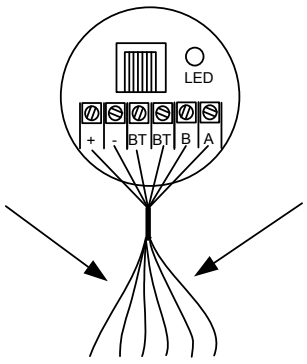

A RJ45 to a 6 way Terminal Connector

RJ45 Plug & RJ45 Plug to Terminal

Drawing: RJ45 Plug **Page: 11**

Windcrest LiftBits Ltd Tel: 0208 795 0333 Fax: 0208 795 0444

AVCOM Functions

Configuration

The AVCOM system can be configured to be EN1/EN3/EN4 System. Refer to the page no 30. for Programming of the Unit.

Interconnection

All the speaker box assemblies will be connected directly or indirectly via a 6 wire bus (however a CAT5 cable with RJ45 Connectors will be used of installation) to the Control/Power supply unit. This interconnecting wire bus will have a 2 pairs of wires for the Power supply, a pair for the Audio and a pair for the Data.

Operation

Autodialler

The Autodialler will function at all times when the Fire Fighting Switch has not been operated.
Ie If the Car push button is operated, for 3 seconds and the alarm filter allows the signal to trigger the Windcrest autodialler, the Yellow Pictogram will operate and a Speech Synthesis message will be announced in the lift car. This message will instruct and reassure the passenger that a call for assistance is being made.
The autodialler will attempt calling the 1st pre-programmed number. If the person who answers the call, presses * button on the telephone handset, Green Pictogram will operate in the Lift Car. During the conversation a speech synthesis reminder will occur to inform the need to press the Alarm Button in the Lift Car to continue the call. If he fails to do so, the call will terminate. If however the call is to be terminated prior to the automated termination, a “0” on the called persons telephone will terminate the call.

The calling out by the Engineer from the Top of car, Motor Room and the Lift Pit will be the same, except the pictogram operation. Lift Car Alarm Push will have priority over all other Alarm Calls. i.e. If Alarm is Activated from top of car and during the call, if Alarm Push button is detected from the Lift Car, it will disable the Top Of Car call and activate Alarm call from Lift Car.

Intercom

If unit is programmed for EN4 functions, at any time when the system is idle, i.e no alarm activation/Fire Fighting OFF, intercom facility will be available within Motor Room, Lift Car, Lift Pit, Lift Top Of car. Intercom can be operated by pressing the corresponding button on the KeyPad. Pressing the same button will switch off the intercom. When Intercom will be open corresponding LEDs will be ON, on the keypad on all outstations to indicate Intercom is ON.

Note : Anytime, if Alarm button is pressed intercom will be switched off and AVCOM system will perform normal Autodialler function from the outstation.

Windcrest **LiftBits Ltd** **Tel: 0208 795 0333** **Fax: 0208 795 0444**

AVCOM Fire Fighting Functions

Configuration

The AVCOM system can be configured to be EN1/EN3/EN4 and/or with Fire Fighting System. Refer to the Page no 30 for the programming.

Interconnection

Connect Fire Fighting Main Landing Speaker to the bus. This interconnecting wire bus will have a 2 pairs of wires for the Power supply, a pair for the Audio and a pair for the Data. If Fire Fighting System is with StandAlone/EN1/EN3, then connect the Top Landing Speaker/MRL FF Landing Speaker to the bus. Refer to Page 28 for the Lift Controller Contacts

Operation

When Fire Fighting Switch is turned on at the Fire Fighting Main Panel, 3 way communication will be turned ON among the Lift Car Speaker, MRL FF Landing Speaker/Top Landing Speaker and the Main Landing Speaker. There is press to speak push button at the MRL FF Landing Speaker/ Top Landing Speaker and the Main Landing Speaker. When the Fire Fighting Switch is Turned ON, Green Pictogram will illuminate in the Lift Car to Indicate communication link is ON. Pictograms at the MRL FF Landing Speaker/Top Landing Speaker and the Main Landing Speaker to indicate the status of the system.

When the Fire Fighting system is ON, no other operation will be allowed except Evacuation.

Turning OFF the Fire Fighting Switch will switch OFF the Communication and Pictograms.

Windcrest **LiftBits Ltd** **Tel: 0208 795 0333**
Fax: 0208 795 0444

AVCOM Evacuation Functions

Interconnection

Connect the main Evacuation Panel to the Bus. Connect all the Landing Speakers to the bus. This interconnecting wire bus will have a 2 pairs of wires for the Power supply, a pair for the Audio and a pair for the Data. Refer to Page 28 for the Lift Controller Contacts and the Evacuation Switch Contacts (Yellow & Blue) from the Main Panel.

Operation

To activate the evacuation system, place the EURO switch in the ON position. All the LEDs for the Landing Speakers and the Lift Car will flash for 5 seconds when the system is analysing the Outstations. After 5 seconds, the LEDs on the main Panel will be ON for the outstations which are present working (i.e. Data Link is Working) for 3 seconds. All LEDs will be switched OFF on the Pit, Top Of Car, MRL Speaker Keypads. The “Listen” Pictogram will be ON to indicate that the system is ready.

At the all Landing Speakers Call Button will Flash slowly to Indicate System is ON.
On pressing the CALL button on any outstation, the LED will start flashing faster to indicate placement of a call. At the same time the corresponding LED for that outstation and a buzzer will operate. The flashing and buzzing will continue till the person on the Main Control Panel answers the call by pressing the corresponding button. At the point the voice link is opened, the LED on the calling outstation and main panel will remain ON till the voice link is terminated.

When Voice Link is active, press to speak button will control the speech from the master station. When press to speak button is released, Main Control Panel’s microphone will be muted and outstation microphone will be ON, and Main Control Panel’s microphone is muted. When press to speak button is pressed and Hold, Outstation microphone will be muted and Master Panel microphone will be ON. Pictograms at the Main Control Panel and the Landing Speaker will show the status of speak/listen. i.e. when the speaker box’s Mic will be ON, “Speak” Pictogram will illuminate and when the Speaker Box’s Mic will be OFF, “Listen” Pictogram will illuminate.

A call can be made to any of the Outstation by simply pressing the button for that outstation on the Main Control Panel. As soon as the button is pressed the LED on both the outstation and the Master Panel will be steady ON and a two way communication is possible via press to speak button on the Main Control Panel.

The call can be terminated by the pressing the same button again at which point LEDs on the outstation and Main Control Panel will go off and the Pictograms at the Landing Speakers will be switched off and at the Main Panel “Listen” Pictogram will illuminate to indicate the system status.

When Evacuation Switch is turned OFF, Both the Pictograms at the Main Control Panel will be switched off and Push Button LED at all the Landing Speakers will be turned OFF. Top of Car, Pit, MRL speaker units’ keypad will be live again.

Note :- When Evacuation system is ON, System will not allow any other operations. When Evacuation System is turned ON, it will abandon any ongoing operation. i.e. FF, Intercom, Autodialler.

Windcrest **LiftBits Ltd** **Tel: 0208 795 0333**
Fax: 0208 795 0444

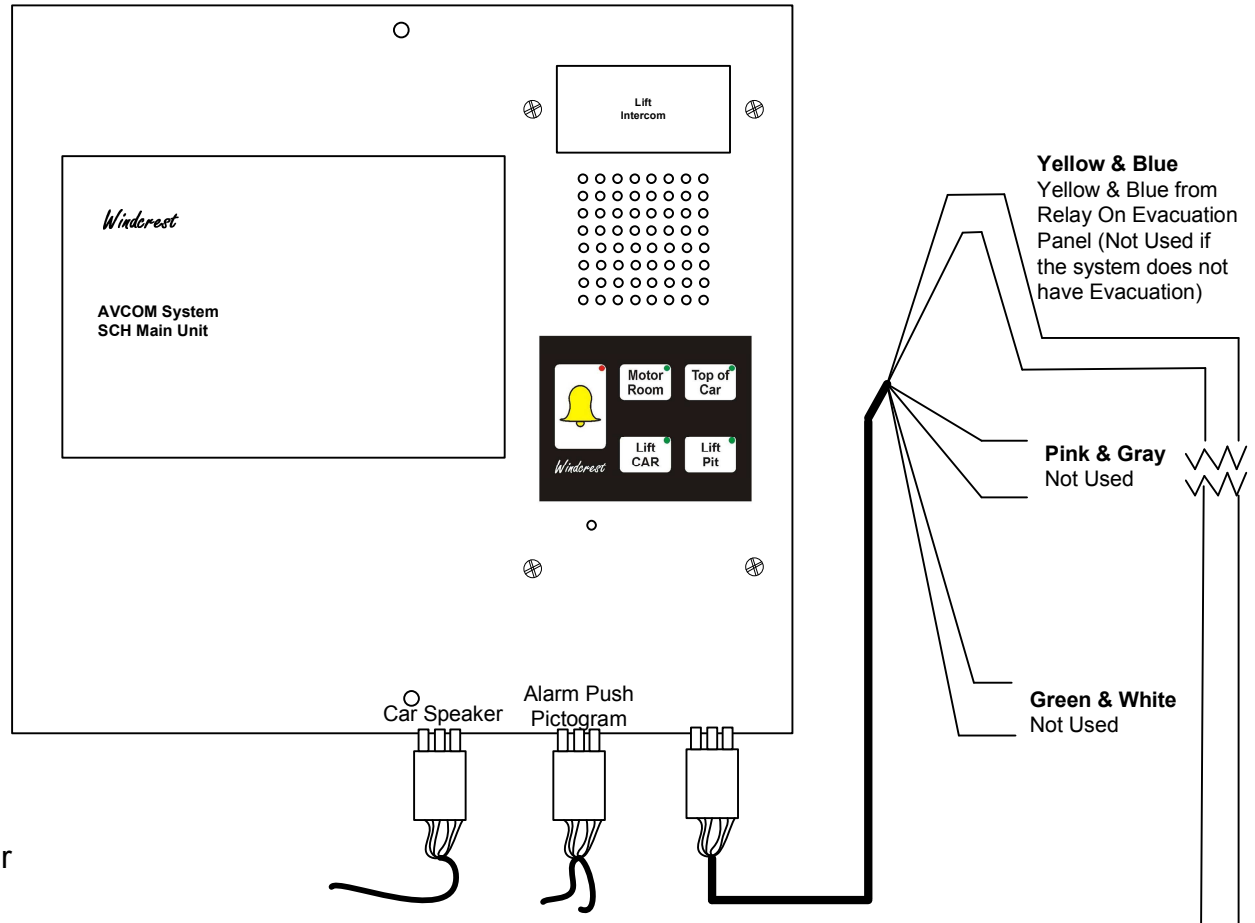

Top of Car

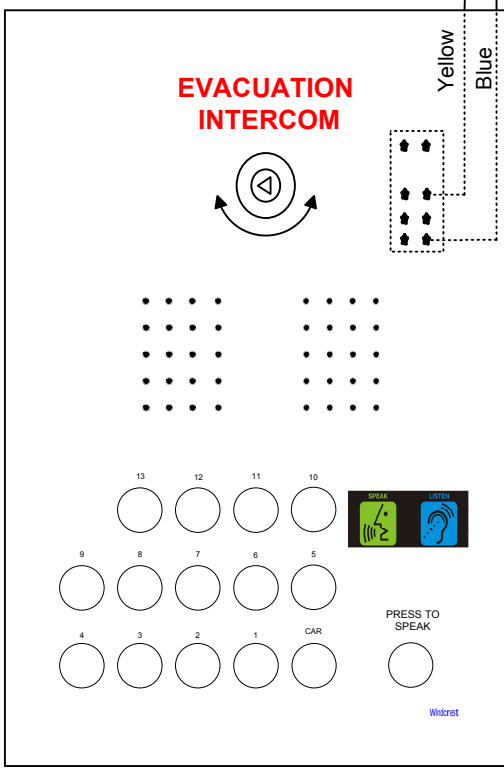

Main Panel

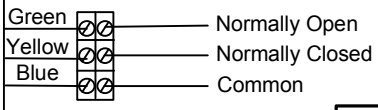

Lift Controller Spare Contacts From Euro Switch

For Fire Fighting Intercom

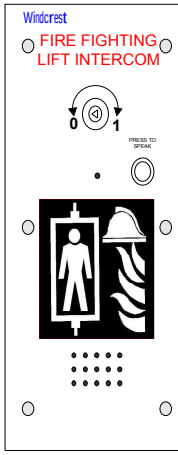

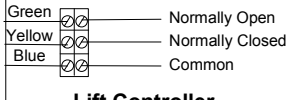

Lift Controller Spare Contacts From Euro Switch

Lift Controller Spare Contacts & Evacuation Switch

Drawing : Car Speaker Wiring **Page : 15**

01/08/2011 **Version: 2**

Background Operation

The system will make the automated 3 day test calls to a Central Station in accordance to EN81-28.

Troubleshooting

If LEDs on the Keypad of the outstation speakers, both pictograms in the Lift Car starts flashing continuously, it indicates data failure to that point. i.e. If Lift car speaker's both pictogram flash continuously, it indicates data link failure to Lift car speaker. This can occur due to data cable failure or incorrect programming. i.e. If system is programmed for EN1, Top of Car, Pit and MRL/Motor Room speaker will not receive the Data.

If Pictograms at the Main Fire Fighting Landing and the MRL-FF Landing/Top Landing Speaker for Fire Fighting start flashing continuously, it indicates data link is failed at those outstations. This can occur due to data cable failure or incorrect programming. i.e. if system is NOT programmed for Fire Fighting, FF Main Landing and Top Landing Speaker will not receive the Data.

On the Top of Car, MRL/Motor Room, Pit Speaker, there is a keypad representing all the buttons for Top of Car, Car, Pit and MRL/Motor Room. In the idle mode, those all LEDs will be lighting up in the loop to indicate system is live and Data Link is available to the speaker. If any of the button's LED does not light up in the sequence, it indicates that Outstation Speaker is not programmed in the system or that Outstation Speaker is not present in the system, which may be due to data failure to the outstation, Outstation Speaker not connected to the system or Outstation Speaker itself may have gone faulty.

For Example, if the Main Unit is programmed as EN3 system which is Lift Car, Top of Car and Lift Pit. On the Top of Car and Pit KeyPad Motor Room button's LED will not light up any time.

Note: During the programming of the unit via Windcrest Handheld Programmer, Unit will not scan any outstations. i.e. no data link, which will result in the flashing of the all the LEDs at all outstation speakers.

Windcrest **LiftBits Ltd** **Tel: 0208 795 0333** **Fax: 0208 795 0444**

Programming of the AVCOM System

All input data must be entered by the pressing of the “Enter” button and go back a step by pressing “Cancel” button.

Pressing “Enter ” button on the programmer would show 2 options. “1” to choose programming and “5” to check Programming content.

Press 1 to choose programming.

1. “Unit Type EN?” Press 1 for EN1, 3 for EN3 and 4 for EN4. If no autodialler functions are required then press 0.
2. “2 LIFT CAR SPKs?”. Press 1 for 2COP arrangement. Press 0 for 1 COP.
3. “Lift Alert?”. Press 1 if LiftAlert interface is connected. Press 0 if no LiftAlert Interface.
4. “Fire Fighting?” and Press 1 if Fire Fighting system is connected and 0 if fire fighting system is not connected .

If Unit is programmed for Autodialler functions, i.e.EN1/EN3/EN4 then only following options will be shown.

5. CB Hot Line? Press 1 for CB Hot Line and 0 for non CB hot Line.

If CB Hot Line option is selected, telephone number options will not be available.

6. Enter 1st number
7. Enter 2nd number
8. Enter 3rd number
9. Enter 4th number
10. “Auto Test Call?” Press 1 to Enable Auto-Test Call. Press 0 to Disable.
11. “Test Call Hours?” This option will be available if the Auto-Test Call is Enabled. Program the test call frequency between 01 to 99 Hours. Default Test Call frequency is 70 hours.

    If Auto Test Call is Disabled the Windcrest Programmer display will show “Windcrest” and “System Ready” on the idle screen. i.e. when unit is not in the programming or not in any mode of operation.
    if Auto Test Call is Enabled, the Windcrest Programmer Display will show “Windcrest” and “HH:MM:SS” (Remaining Time before the Next Test Call).

12. If Auto Test Call is enabled, Enter C/S number? (central station number) else Enter 5th Number.
13. Auto Pictogram? Press 1 to change pictogram automatically and 0 to disable automatic switching of the pictogram. Default 0.
14. Ignore DTMF? Press 1 to disable DTMF detection and 0 to Enable DTMF detection. Default 0.
15. RPA number? Remote Programming Access number. Default 1234. This is the Pass Code to program the unit from the remote. i.e. by Incoming Call.
16. Call duration? Enter 1 to 9 minutes call duration.
17. Instant Trigger? Press 1 for Instant Trigger. Press 0 for 3 second trigger delay.
18. AlarmPush N/C? Press 1 for Normally Closed Alarm Push. Press 0 for Normally Open Alarm Push in the Lift car.

Windcrest **LiftBits Ltd** **Tel: 0208 795 0333** **Fax: 0208 795 0444**

Programming of the AVCOM System

19. Autojump next? Press 1 to Enable autojump and 0 to disable autojump.
When AutoJump is Enabled, by triggering the Unit, unit will dial the 1st Telephone number and will wait for the acknowledgement * from the recipient of the call. If * is not received within 30 seconds of the Dialling, unit will jump to the 2nd Telephone Number. The unit will continue Jumping to the Next number unless * is received from the call recipient (The unit will jump till the 5th telephone number and then will stop jumping).

20. Voice Identify? Press 1 to enable Voice Identify and 0 to disable voice identify.
When voice identify is Enabled, the unit will announce the Recorded Message Automatically after dialling the number. After the message the call recipient should press * to speak to the person in the Lift Car.
Please note if the call recipient does not press *, communication to the Lift Car will not be possible with the Voice Identify Enabled.

20A. Press 1 to start Recording via Telephone Handset Connected to the Master Board, Press 2 to play the Recorded Message via Telephone Handset Connected to the Master Board and Press Enter to finish.

To Record the Message without Voice Identify :
If the Recorded Message is not required after dialling the number automatically, then on pressing the * by the call recipient will announce the Recorded Message and change the pictogram.
To record the message without programming voice identification, come back to the idle mode. i.e. come out of the Programming and on the programmer "Windcrest" should flash continuously.
A. Press "3" on the Programmer. "SELECT TEST" will be displayed.
B. Press "5" on the Programmer. "RECORD NEW?" and "PRESS 1 TO START" will be displayed.
C. Connect the normal telephone handset to the unit and Press "1" on the Programmer to start Recording Via Telephone Handset.
D. Recording duration will be 10 seconds. After the 10 Seconds Programmer will show "SELECT TEST".
E. To listen to the Recorded Message Press "9" on the programmer.
F. Pick Up the Handset Connected to the Unit and press "1" on the Programmer to start Playing the Message. Message will be heard in the telephone handset.
G. Once the Playing Message will be finished, programmer will display "SELECT TEST" on the Programmer.
H. To Re-Record the Message Repeat the Steps from B. If the Message was recorded Properly then Press "#" on the programmer. The programmer will show the idle screen.

21. Have you finished? Press 1 to finish programming, Press 0 to restart programming and Press 5 to check programming content..

Windcrest **LiftBits Ltd** **Tel: 0208 795 0333** **Fax: 0208 795 0444**

Remote Programming of the AVCOM System

To remotely program the Unit,

1. Call the Main Unit from the Normal Telephone Handset or Mobile.
2. The unit will answer the incoming call with the message “Answering Incoming Call”.
3. Wait for 2 seconds after the Message and Press *RPA CODE# on the telephone handset.
   i.e. Default RPA Code will be 1234 so *1234# is required to be pressed. When the unit will accept the RPA Code, the unit will announce “1”. If the RPA code is not entered Correctly then unit will announce “0”.
4. Once the RPA Code is accepted then use the following codes to Program :
   Please Note if the unit accepts the string, unit will announce “1” at the end of the string. If anytime wrong key is being detected, unit will announce “0”. Once the string is identified wrongly, wait for 2 seconds and re-start the string.

   It is not necessary to program all the parameters. Programming can be terminated anytime once the desired parameters are set.

1st Telephone Number	*11#Telephone Number#
2nd Telephone Number	*12#Telephone Number#
3rd Telephone Number	*13#Telephone Number#
4th Telephone Number	*14#Telephone Number#
5th Telephone Number	*15#Telephone Number#
AUTO-TEST	*20#N# N = 1 to Enable, N = 0 to Disable.
AUTO-JUMP	*21#N# N = 1 to Enable, N = 0 to Disable.
AUTO-PICTOGRAM	*22#N# N = 1 to Enable, N = 0 to Disable.
CB HOT LINE	*23#N# N = 1 to Enable, N = 0 to Disable.
VOICE ID	*24#N# N = 1 to Enable, N = 0 to Disable.
INSTANT_TRIGGER	*25#N# N = 1 to Enable, N = 0 to Disable.
Call Duration	*30#N# N = 1 to 9 Minutes.

5. To terminate the Remote Programming Press *00#. The unit will announce thank you and end the call.

Local Programming Vial Telephone Handset :

The unit can also be programmed by connecting the Normal Tone Dial Telephone Handset to the Unit.

To Program the unit By Local Telephone Handset, Pick Up the handset connected to the Unit and follow the Remote Programming Steps from 2 to 5 as described above.

Windcrest **LiftBits Ltd** **Tel: 0208 795 0333**
Fax: 0208 795 0444

All AVCOM Speakers have unique address. This address is set by the Dip Switch on the back of the each speaker box. Following are the arrangements for the Dip Switch for the different speaker box.

Note: X – Do Not Care

	1	2	3	4	5	6
Car Speaker	ON	Off	Off	Off	Off	X
Top Of Car Speaker	Off	ON	Off	Off	Off	X
Pit Speaker	ON	ON	Off	Off	Off	X
MRL Speaker (For EN4 & FF)	Off	Off	ON	Off	Off	X

2COP Speaker — This address is special and to be set at factory only.

FF Top Landing (EN3/EN1 StandAlone FF) — This address is special and to be set at factory only.

Fire Fighting Main Landing — This address is special and to be set at factory only.

Evacuation Landing Speaker	1	2	3	4	5	6
Landing 1	ON	Off	Off	Off	Off	X
Landing 2	Off	ON	Off	Off	Off	X
Landing 3	ON	ON	Off	Off	Off	X
Landing 4	Off	Off	ON	Off	Off	X
Landing 5	ON	Off	ON	Off	Off	X
Landing 6	Off	ON	ON	Off	Off	X
Landing 7	ON	ON	ON	Off	Off	X
Landing 8	Off	Off	Off	ON	Off	X
Landing 9	ON	Off	Off	ON	Off	X
Landing 10	Off	ON	Off	ON	Off	X
Landing 11	ON	ON	Off	ON	Off	X
Landing 12	Off	Off	ON	ON	Off	X
Landing 13	ON	Off	ON	ON	Off	X
Landing 14	Off	ON	ON	ON	Off	X
Landing 15	ON	ON	ON	ON	Off	X
Landing 16	Off	Off	Off	Off	ON	X
Landing 17	ON	Off	Off	Off	ON	X
Landing 18	Off	ON	Off	Off	ON	X
Landing 19	ON	ON	Off	Off	ON	X
Landing 20	Off	Off	ON	Off	ON	X
Landing 21	ON	Off	ON	Off	ON	X
Landing 22	Off	ON	ON	Off	ON	X
Landing 23	ON	ON	ON	Off	ON	X
Landing 24	Off	Off	Off	ON	ON	X
Landing 25	ON	Off	Off	ON	ON	X
Landing 26	Off	ON	Off	ON	ON	X
Landing 27	ON	ON	Off	ON	ON	X
Landing 28	Off	Off	ON	ON	ON	X
Landing 29	ON	Off	ON	ON	ON	X
Landing 30	Off	ON	ON	ON	ON	X
Landing 31	ON	ON	ON	ON	ON	X

Windcrest **LiftBits Ltd** **Tel: 0208 795 0333** **Fax: 0208 795 0444**

AVCOM System Part Number List :-

AVCOM EN1 Main Unit - AVCOM-MU-SCH-EN1
AVCOM EN3/EN4 Main Unit - AVCOM-MU-SCH-EN¾
AVCOM 20mm Car Speaker - AVCOM-SPK-CL
AVCOM Stripped Down Car Speaker – AVCOM-SPK-CL-ST
AVCOM 20mm 2COP Car Speaker - AVCOM-SPK-2COPCL
AVCOM Stripped Down 2COP Car Speaker – AVCOM-SPK-2COPCL-ST
AVCOM Top of Car Speaker - AVCOM -SPK-TC
AVCOM Pit Speaker - AVCOM-SPK-PT
AVCOM MRL Speaker - AVCOM-SPK-MR
AVCOM MRL+FF Speaker (This is for EN4 system with Fire Fighting) - AVCOM-SPK-MRL-FF
AVCOM FF Main Landing (Flush Mounted) - AVCOM-FF-MAIN (F)
AVCOM FF main Landing (Surface Mounted) - AVCOM-FF-MAIN (S)
AVCOM FF Top Landing (Flush Mounted) - AVCOM-FF-TOPL (F)
(This is for standalone Fire Fighting, EN1 system with Fire Fighting & EN3 System with Fire Fighting)
AVCOM FF Top Landing (Surface Mounted) - AVCOM-FF-TOPL (S)
(This is for standalone Fire Fighting, EN1 system with Fire Fighting & EN3 System with Fire Fighting)
AVCOM Evacuation Main Panel up to 10 floors (Flush Mounted) - AVCOM-EVAC-MAIN (F)
AVCOM Evacuation Main Panel up to 10 floors (Surface Mounted) - AVCOM-EVAC-MAIN (S)
AVCOM Evacuation Landing Speaker (Flush Mounted) - AVCOM-EVAC-SPK (F)
AVCOM Evacuation Landing Speaker (Surface Mounted) - AVCOM-EVAC-SPK (S)

Windcrest **LiftBits Ltd** **Tel: 0208 795 0333**
Fax: 0208 795 0444