Evacuation Intercom System

TYPE: Point to Point Cabling

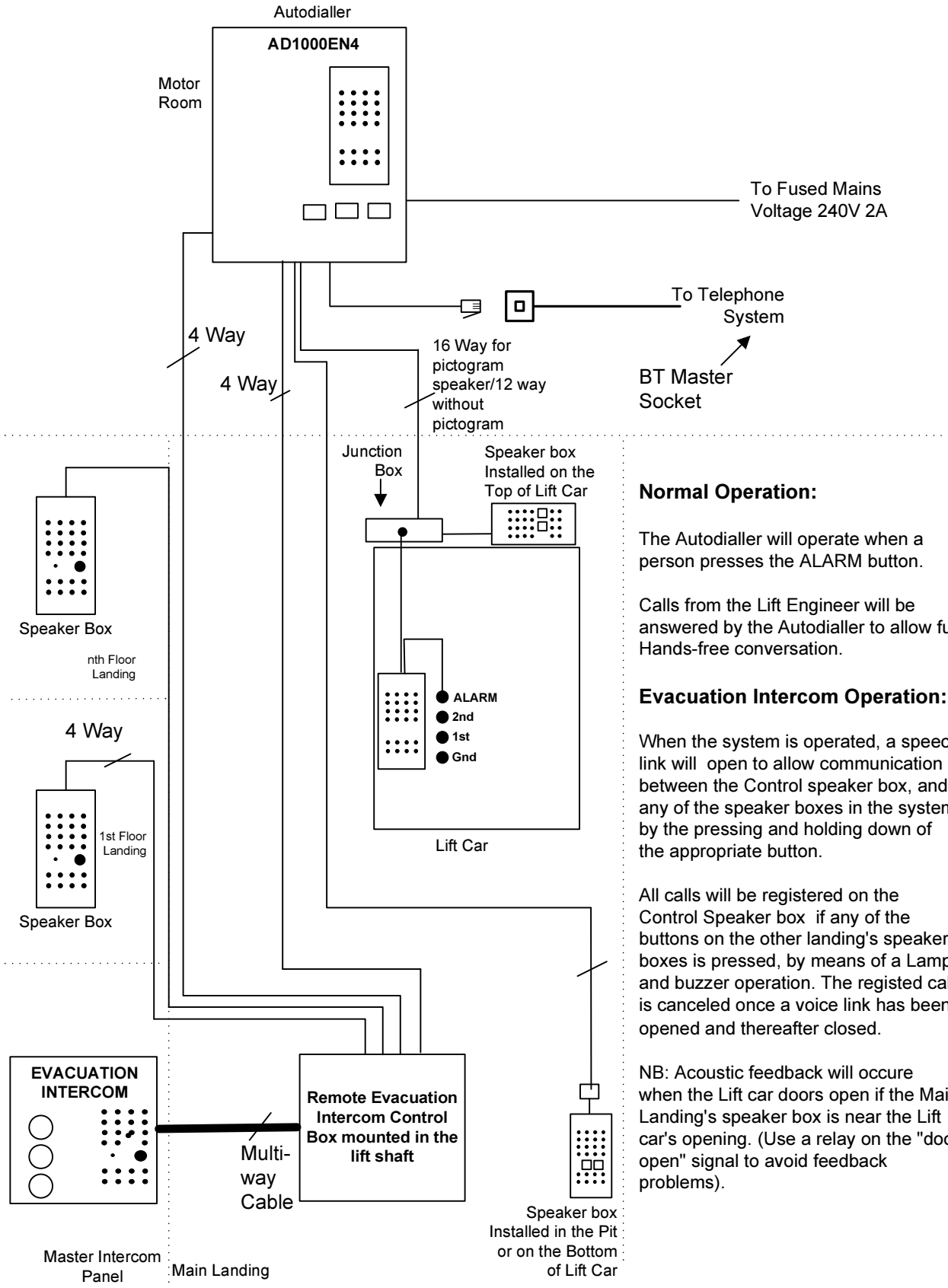

Normal Operation:

The Autodialler will operate when a person presses the ALARM button.

Calls from the Lift Engineer will be answered by the Autodialler to allow full Hands-free conversation.

Evacuation Intercom Operation:

When the system is operated, a speech link will open to allow communication between the Control speaker box, and any of the speaker boxes in the system, by the pressing and holding down of the appropriate button.

All calls will be registered on the Control Speaker box if any of the buttons on the other landing's speaker boxes is pressed, by means of a Lamp and buzzer operation. The registed call is canceled once a voice link has been opened and thereafter closed.

NB: Acoustic feedback will occure when the Lift car doors open if the Main Landing's speaker box is near the Lift car's opening. (Use a relay on the "door open" signal to avoid feedback problems).

Evacuation Intercom intergarated with an Autodialler EN4	Drawing: Evac-EN4 Page: 1/11 Date: 10/09/05	
	Windcrest (UK) Ltd	Tel: 0208 795 0333 Fax: 0208 795 0444

Stand alone Evacuation Unit

This Evacuation system will allow communication from any of the outstations, i.e. from the Landings, the Motor room and the Lift Car to a Master Evacuation unit on the main evacuation floor.

A call is made for attention by the pressing of the “CALL” button on the outstation, where upon the button on the Main Evacuation unit will illuminate and a buzzer operate.
If the evacuation Manager decides to speak with the caller, he simply presses the illuminated button to open the speech channel. After the conversation has finished, the Evacuation Manager presses the button again to cancel the voice link and the illumination of the button.

If the evacuation Manager wishes to call any of the outstations at any time, he presses the appropriate button and opens the voice link together with illuminating the button. On completion of the conversation the repressing of the button will clear the call and the illumination of the button.

Evacuation Intercom system Integrated with an Autodialler

The Integration of the Evacuation Intercom system with an Autodialler is efficient in that the same speaker box assembly used for the lift car can be used for both applications. (NB: not at the same time).

If integration is required, a set of relays simply switch the car speaker, (some times the motor room speaker as well) and the associated the Call signal i.e. alarm button signal, so that it can be used in the Evacuation system as another landing speaker box.

For ease of interconnection a provision must be made for cables to connect the Autodialler with the Evacuation Main unit at the time of installing the Autodialler. (The Autodialler is usually mounted in the Motor room whilst the Evacuation Main unit is mounted on the main evacuation floor or partly in the lift shaft).

Once the installation has been completed, the Autodialler will operate as per the Autodialler instructions if the Evacuation system has not been switched ON. If the Evacuation system is switched ON, the operation of the system will be as described above. (A set of voltage free contacts are provided to place the Lift in an “Evacuation Mode”).

Windcrest (UK) Ltd

Tel: 0208 795 0333
Fax: 0208 795 0444

Operation of the Evacuation System

This Evacuation system (which may be integrated with an Autodialler) will allow communication from any of the outstations, ie from the Landings, the Motor room and the Lift Car to a Master Evacuation unit on the main evacuation floor.

A call is made for attention by the pressing of the “CALL” button on the outstation, where upon the button on the Main Evacuation unit will start flashing and a buzzer operates.

If the Evacuation Manager decides to speak with the caller, he simply presses the flashing button, to answer the call, at which point the buzzer will stop, the flashing button will illuminate solid and the speech channel will open for a two way communication. A button has been included for “Press to Speak” on systems to overcome high background noise.

After the conversation has finished, the Evacuation Manager presses the illuminated button again to cancel the voice link and the illuminated button.

If the Evacuation Manager wishes to call any of the outstations at any time, he simply presses the appropriate button and opens the voice link together with illuminating the button. On completion of the conversation the repressing of the button will clear the call and the illumination of the button.

If a second person on an outstation requires assistance, whilst the Evacuation Manager is communicating, the button associated with his call will start flashing. This call can be answered, by terminating the current call and pressing the flashing button.

Windcrest (UK) Ltd

Tel: 0208 795 0333
Fax: 0208 795 0444

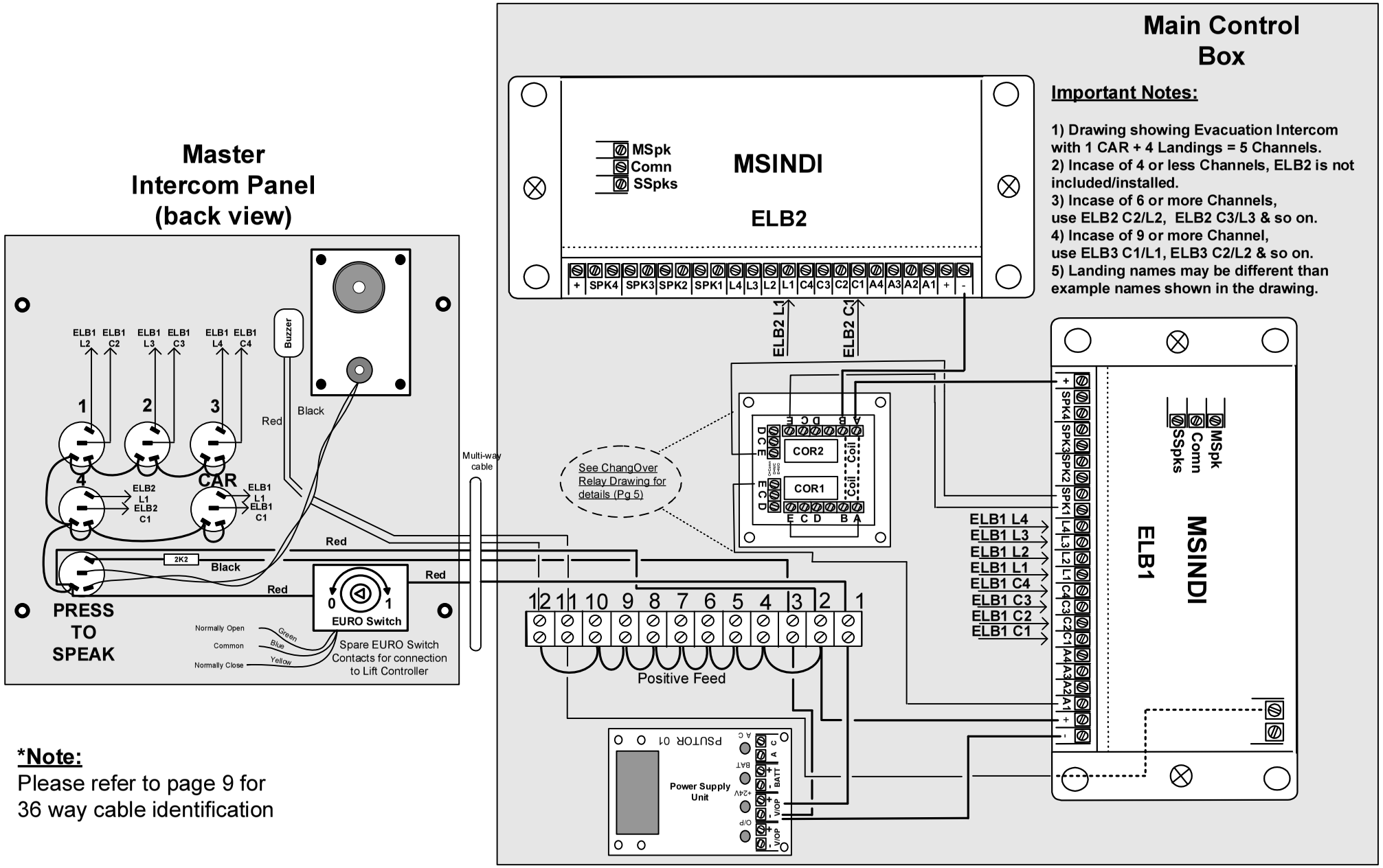

Example drawing showing internal wiring of Evacuation Intercom Main Panel to Control Box with 5 landing stations

Drawing: Evac Internal	Page: 4/11 Date: 17/03/06
Windcrest	Tel: 0208 7950 333 Fax: 0208 795 0444

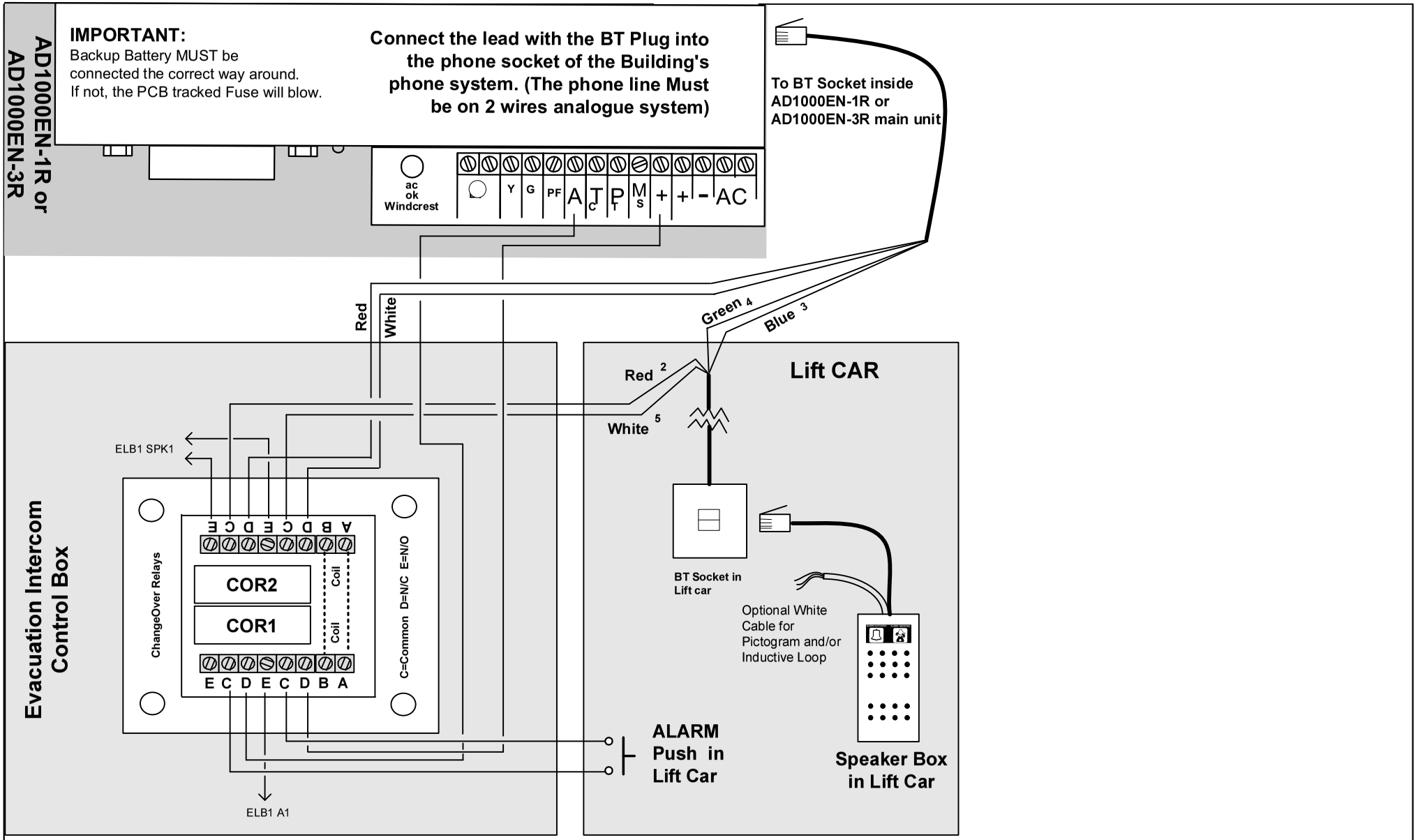

Wiring of the AD1000EN-1R or AD1000EN-3R to Evacuation System (Car Speaker & the Alarm Signal)

Drawing: EN1-Evacuation Page: 5/11
Date: 10/03/06

Windcrest
Tel: 0208 795 0333
Fax: 0208 795 0444

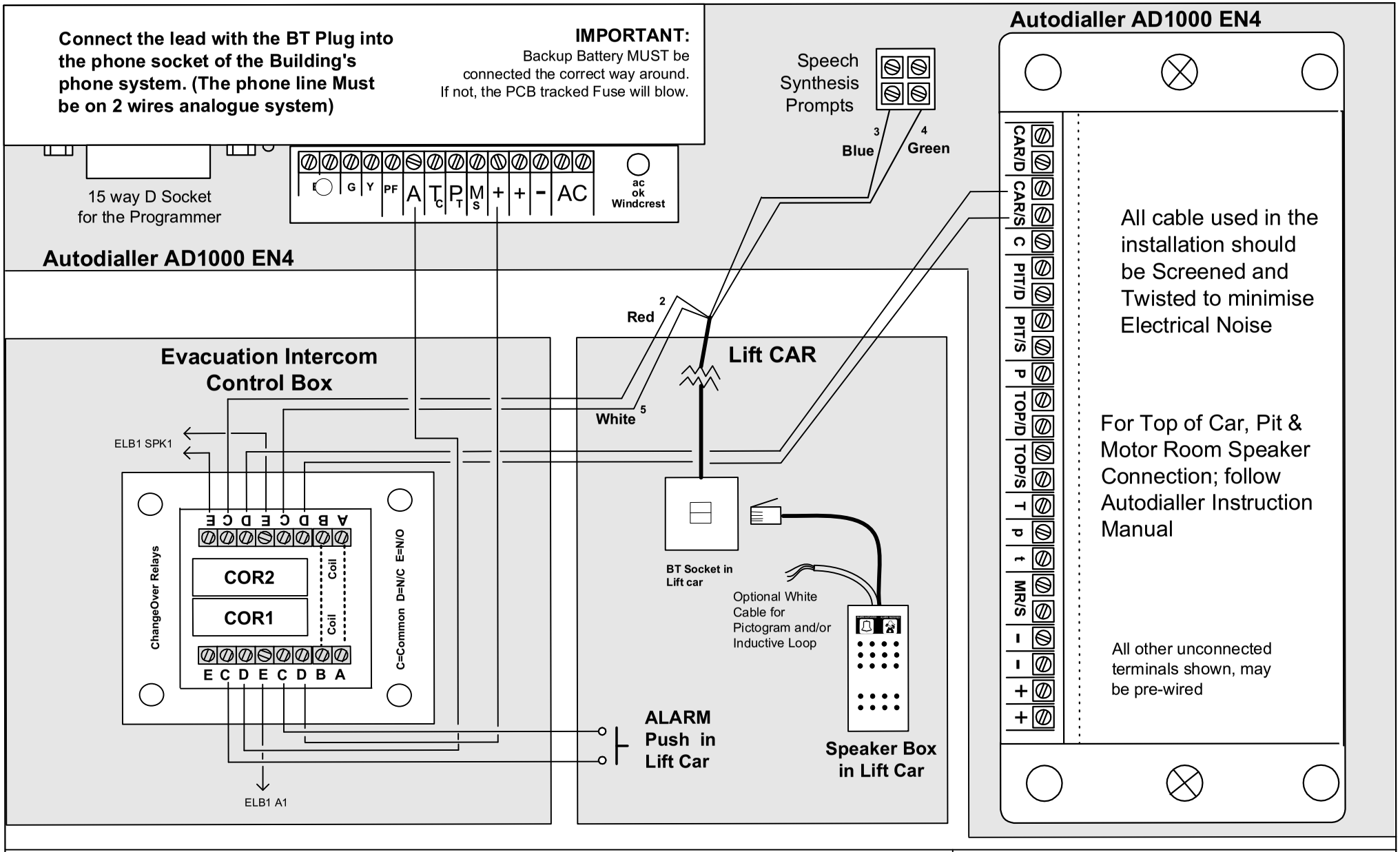

Wiring of the AD1000EN-4R to Evacuation System (Car Speaker & the Alarm Signal)

Drawing: EN4-Evacuation Page: 6/11
Date: 20/10/05

Windcrest
Tel: 0208 795 0333
Fax: 0208 795 0444

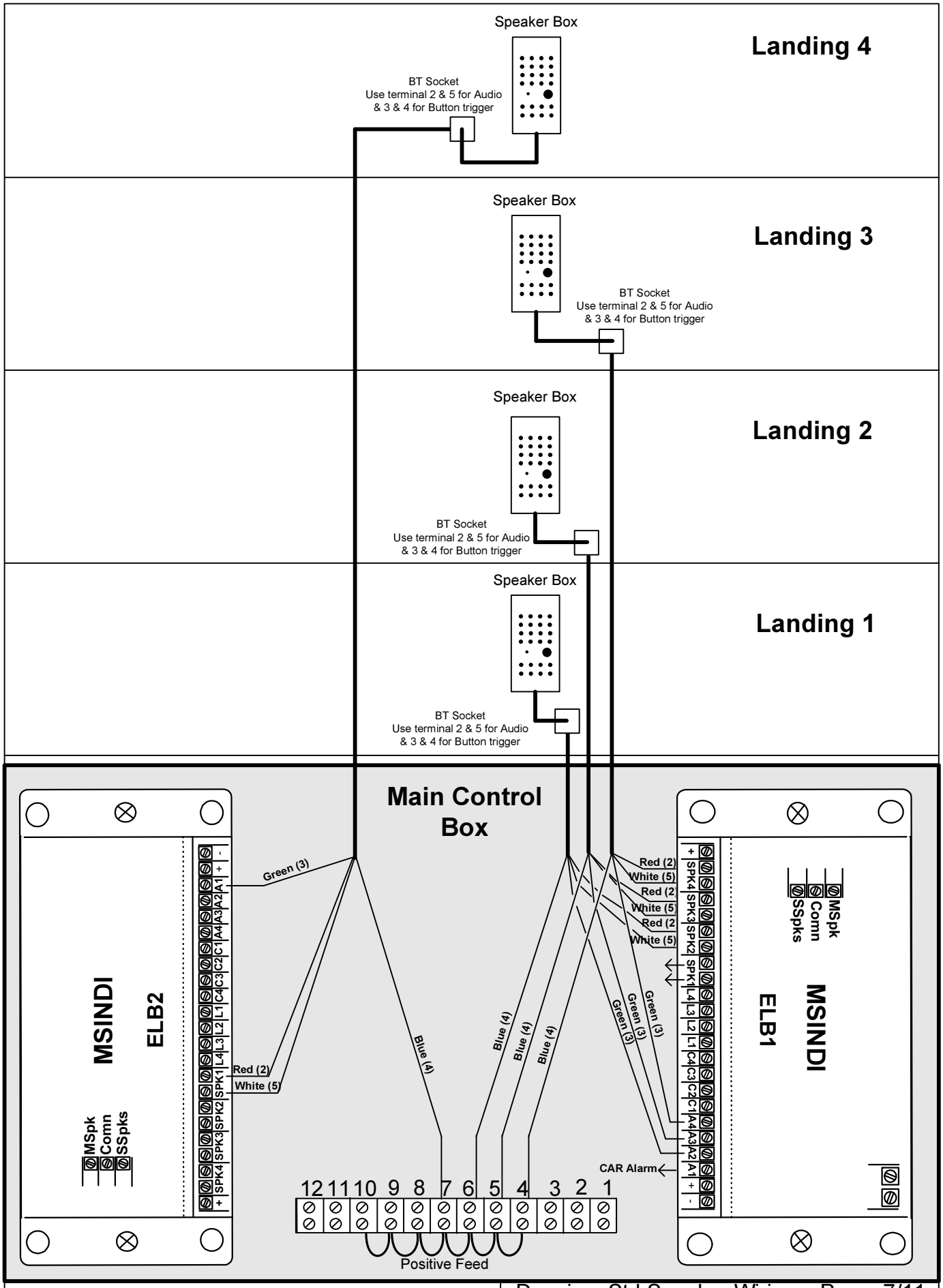

Landing Speaker Wiring to Evacuation Intercom (Standard Speaker – Flush Mount)

Drawing: Std Speaker Wiring Page: 7/11
Date: 09/09/05

Windcrest (UK) Ltd
Tel: 0208 795 0333
Fax: 0208 795 0444

Refer to Next Page for Button Cable Wiring

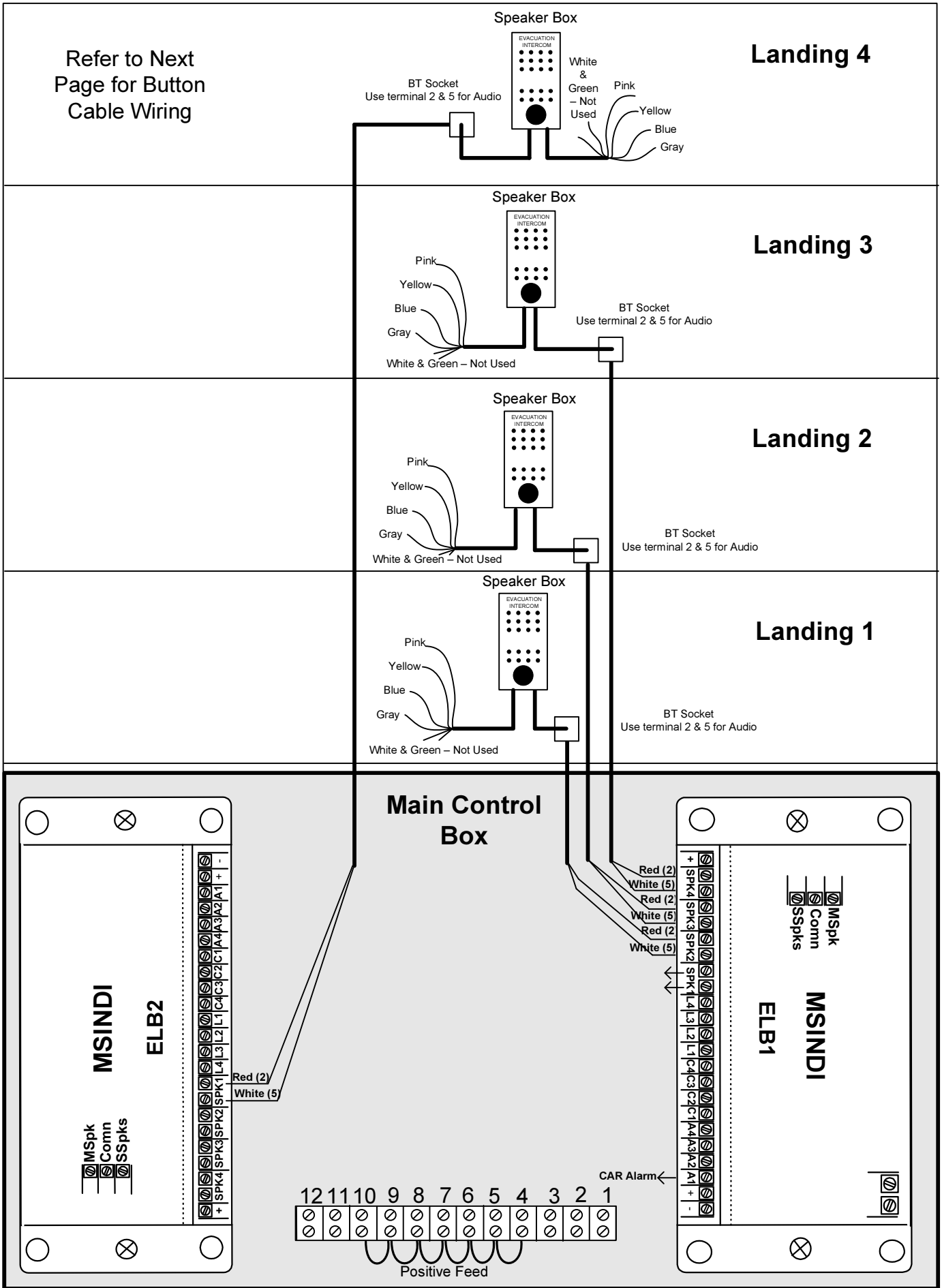

Landing Speaker Wiring to Evacuation Intercom (Surface Mount Speaker)

Drawing: Std Speaker Wiring Page: 8/11
Date: 09/09/05

Windcrest (UK) Ltd
Tel: 0208 795 0333
Fax: 0208 795 0444

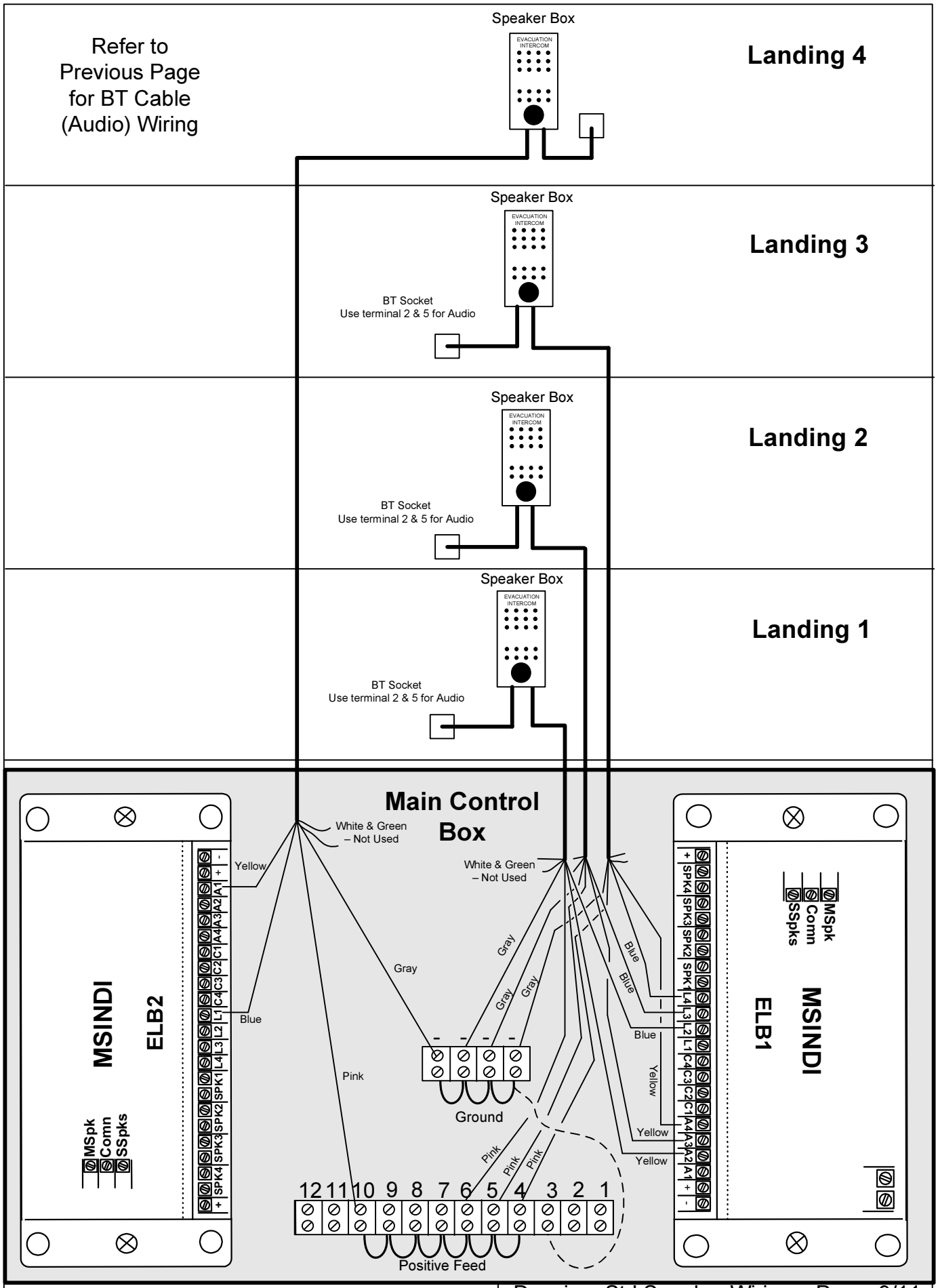

Landing Push Button Wiring to Evacuation Intercom (Surface Mount Speaker)

Drawing: Std Speaker Wiring Page: 9/11
Date: 09/09/05

Windcrest (UK) Ltd
Tel: 0208 795 0333
Fax: 0208 795 0444

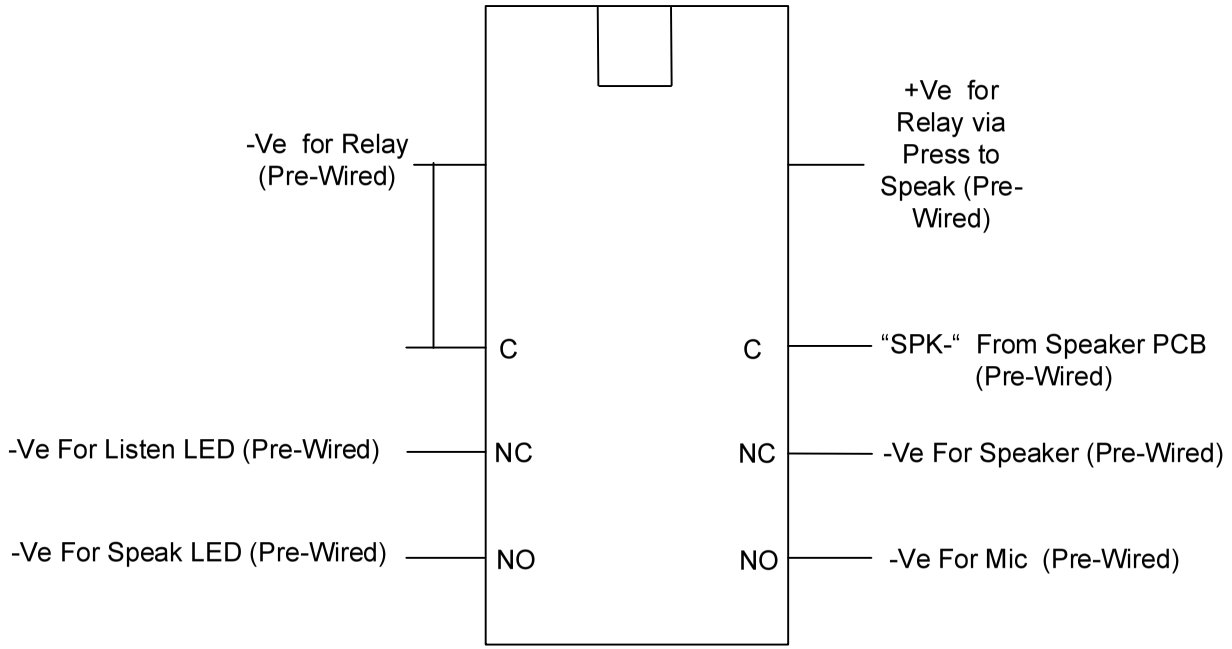

Switching Relay Wiring Behind Main Switching Panel

Drawing: Switching Relay Page: 10/11
Date: 20/10/05

Windcrest
Tel: 0208 795 0333
Fax: 0208 795 0444

25 Way cable IDENTIFICATION

Cable Colour	Switching Panel	Control Box
1 Red	Micro SW C	Terminal 1 on Control Box (24V +Ve)
2 RED/Black	Common 24V +Ve	Terminal 2 on Control Box (24V +Ve)
3 Black	Ground	Terminal 3 on Control Box (0V Return)
4 Blue	Micro SW C	Lift Controller (spare contacts)
5 Green	Micro SW N/O	Lift Controller (spare contacts)
6 Yellow	Micro SW N/C	Lift Controller (spare contacts)
7 WHITE/Blue	Buzzer -Ve	Terminal 11 on Control Box
8 Brown	Audio (Red of Speaker BT Cable)	Terminal 13 on Control Box (Comn ELB1)
9 Violet	Audio (White of Speaker BT Cable)	Terminal 14 on Control Box (MSpk ELB1)
10 Turquoise	Car Push	ELB1 C1
11 Grey	Car LED	ELB1 L1
12 RED/Blue	Landing Push 1	ELB1 C2 (Bottom most landing)
13 GREEN/Red	Landing LED 1	ELB1 L2
14 YELLOW/Red	Landing Push 2	ELB1 C3
15 WHITE/Red	Landing LED 2	ELB1 L3
16 YELLOW/Blue	Landing Push 3	ELB1 C4
17 RED/Brown	Landing LED 3	ELB1 L4
18 ORANGE/Blue	Landing Push 4	ELB2 C1
19 GREEN/Blue	Landing LED 4	ELB2 L1
20 GRAY/Blue	Landing Push 5	ELB2 C2
21 YELLOW/Green	Landing LED 5	ELB2 L2
22 Orange	Landing Push 6	ELB2 C3
23 Pink	Landing LED 6	ELB2 L3
24 White	Landing Push 7	ELB2 C4
25 BLUE/Black	Landing LED 7	ELB2 L4

Note: For bi-coloured cores the base colour is shown in capitals.
Number of cores used vary depending on total number of landings.

Windcrest (UK) Ltd Tel: 0208 795 0333
Fax: 0208 795 0444